1 Practice Test

For questions 1 to 5, select the best answer.

1. What is the volume of the square-based prism?

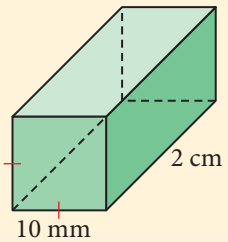

A 2 cm^3 **B** 10 cm^3

C 20 cm^3 **D** 200 cm^3

2. What is the surface area of a cube with a side length of 3 mm?

A 9 mm^2 **B** 18 mm^2

C 54 mm^2 **D** 729 mm^2

3. What is the volume of the cube in question 2?

A 9 mm^3 **B** 18 mm^3

C 54 mm^3 **D** 27 mm^3

4. For a cylinder with a given volume, the minimum surface area occurs when

A the height equals the radius

B the height equals the diameter

C the height equals the circumference

D none of the above

5. What is the area of the figure?

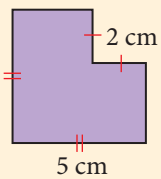

A 9 cm^2 **B** 20 cm^2

C 21 cm^2 **D** 25 cm^2

6. Determine the amount of plastic used to make this solid three-sided ruler to the nearest cubic centimetre.

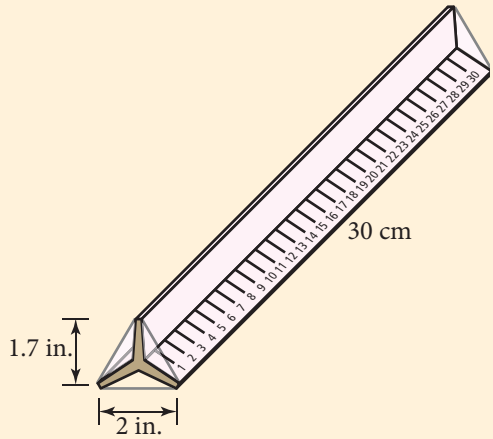

7. A box, used to package men's shirts, is in the shape of a square-based prism and is to have a volume of 8400 cm^3.

a) Determine the dimensions of the box with a minimum surface area.

b) Sketch the box and label its dimensions.

c) Determine the minimum surface area.

8. A cylindrical can of tuna has a diameter of 8 cm and a height of 4 cm. Determine the surface area of the can to one decimal place.

9. Refer to question 8.

a) Determine the volume of the can to one decimal place.

b) For this volume, determine the dimensions of the can with a minimum surface area.

Chapter Problem Wrap-Up

Design a snowboard park, using three or more geometric figures that will allow riders to jump, freestyle, and perform other exciting manoeuvres. Indicate reasonable measures for the dimensions of each figure that will allow you to measure the exposed surface area of snow. Then determine the amount of salt required to cover your terrain park. Recall that 20 kg of salt will cover 400 m^2 of snow.

10. This medallion has a thickness of 2 cm.

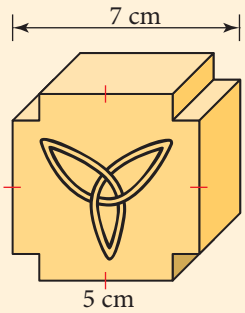

Determine the volume. Discuss any assumptions you made.

11. Helen has 28 m of fencing which she can use to surround a pen for her pigs.

a) What is the maximum area of the pen, assuming that Helen uses fencing for all four sides?

b) How much additional area can be obtained if Helen uses her barn as one side of the pen?

12. The front of this shed is to be painted. Determine the area to be painted, not including the 1.2-m wide door.